CUBIC

Ultrasonic Gas Metering Solutions

Cubic Sensor and Instrument Co.,Ltd.

Cubic Introduction

Cubic Sensor and Instrument Co., Ltd. (hereinafter referred to as "Cubic") is a publicly listed company in SSE STAR Market (stock code:688665), specializing in smart gas sensors and superior gas analyzers. Established in 2003 in Wuhan Optics Valley, Cubic has established gas sensing technology platforms including optical technologies (NDIR, Ultraviolet, Light Scattering, Laser Raman), ultrasonic technology, MEMS metal oxide semiconductor (MOX) technology, electrochemical technology, ceramic thick-film technology based high temperature solid electrolyte technology. Cubic has obtained more than 100 patents at home and abroad, with abundant products widely used in various fields of air quality, environmental monitoring, industrial processes, industrial safety monitoring, healthcare, smart metering and so on.

Cubic has a provincial-level enterprise technology center and a gas analysis instrumentation engineering technology research center in Hubei Province of China. Actively participating in the national technological innovation system,Cubic has successively obtained many national and provincial projects. Those projects contain the National Major Scientific Instrument and Equipment Development Project, the MIIT IOT Development Special Project, the MIIT Strong Foundation Engineering Sensor "One-stop" Project, the Ministry of Science and Technology's Key Special Project for Technology Assisting Economy in 2020, and major innovation projects in Hubei Province, etc. Recognized by authoritative domestic and international industry organizations as a major player and representive enterprise in China's gas sensor industry, Cubic has been honored with titles 'Most Influential IoT Sensor Enterprise Award' by the China IoT Industry Alliance.

With decade-long dedications in technical innovations, strict quality control and global business strategies, Cubic, as a leading manufacturer of high-quality gas sensors and sensor solutions, has obtained the recognition of many well-known Fortune 500 companies as well as other domestic and overseas leading companies in different fields. Cubic products have been exported to more than 80 countries and regions, besides, Cubic is moving towards a higher target to be the international brand in the field of gas sensors.

Core Technologies

20+ Years Focus

Emission Monitoring Solutions

Core Technologies

Professional Technical Engineers

Quick Service Response

Technical Support

Intellectual Property

Numerous National Invention Patents

International PCT Patents

Cubic Certificates

ISO9001: 2015

ISO14001: 2015

ISO45001: 2018

Cubic Glance

Cubic Headquarter

Cubic R&D Center

Cubic Jiashan Factory

Introduction

Cubic offers an ultrasonic gas flow meter solution renowned for its exceptional accuracy and reliability. It employs ultrasonic technology which could achieve long-term accuracy without accuracy degrade. This solution is well-suited for various applications, including natural gas custody transfer and the precise measurement of process gases across different industries.

The gas pass through pipeline each day, which makes the precise measurement of gas flow important for reduce economic losses. Challenging ambient conditions, including variations in temperature, pressure, and dust levels, significantly impact measurement accuracy.

By incorporating pressure and temperature sensors internally and conducting volume conversion following the NX-19 mod standard, Cubic's ultrasonic gas flow meter ensures consistently high performance, delivering standardized flow readings without the necessity for supplementary flow volume correction equipment.

Equipped with an integrated wireless communication module, the flow meter enables remote recharging, data monitoring, and operational status diagnostics, furnishing users with a comprehensive measurement solution and an intelligent management experience. Its built-in diagnostic functionality enables continuous monitoring of the flow meter's status and the immediate triggering of abnormal alarms.

Cubic flow meter also features a robust stainless meter body incorporating titanium alloy transducers with good corrosion resistance, performs measurement with high noise immunity and long-term stability. Ultrasonic measurement features no moving parts, ensuring minimal wear and tear and consequently, nearly maintenance-free operation.

DN50~DN100

DN150

DN200~DN300

* Only for appearance reference

Applications

- LNG industry
- Gas processing plants
- In-plant metering
- Power plants
- Underground natural gas storage
- Custody transfer measurement
- Measurement and regulation stations
- Gas compressor control

Features

High Reliability

- Multipath design detects multiple flow profiles, eliminating turbulence and asymmetric gas flow impact.
- Multipath provides the necessary redundancy capability, and the unique channel substitution technology enables the flow meter to operate reasonably well even in the event of a failure in one channel.
- Titanium alloy transducer employed possesses corrosion resistance, high-pressure resistance, and anti-contamination.

High Performance

- Wide turn-down ratio and excellent repeatability ensure stable measurement in the real-world conditions.
- Temperature and pressure sensors ensure accurate gas flow measurement under various temperature and pressure conditions.

Low Running Cost

- No pressure loss and ultra-low starting flow ensures monitoring of minimal gas consumption.

Maintenance-Free

- No mechanical parts means no wear and tear and maintenance-free.

Convenient Maintenance

- Detachable transducer design for easy periodic maintenance and cleaning.

Smart Monitoring

- Integrated wireless module allows easy remote monitoring and meter status management.

Automatic Self-Diagnostics

- The information of the self-diagnostics is logged in the meter to allow a retroactive check of the measurement process and uploaded to server. Alarming signal will be founded in the server software interface to allow the maintainence on time and easy reason analysis, reducing equipment failures and downtime.

Versatile Power Supply

- Wired power supply with lithium battery for backup enhances system reliability.

Communication Protocol for Industrial Applictaion

- Supports both 4-20mA and Modbus communication simultaneously, providing a diversity of data transmission options.

Measuring Ranges

Cubic ultrasonic gas flow meter is designed for precise measurement of transmission system and custody transfer, complete range from DN 50 up to DN 300. Its ultrasonic technology is based on the transit time measurement, which offers many benefits : no moving parts, no pressure loss, wide measuring range, low start flowrate and insensitiveness to suspended particles.

Nominal Size		Flow Rate			
DN	Inches	m^3/h		ft^3/h	
		Min	Max	Min	Max
50	2	1.5	150	53	5297
80	3	4	400	141	14126
100	4	6	1000	212	21189
150	6	13	1700	459	45909
200	8	20	2700	706	70629
250	10	30	3000	1059	105944
300	12	40	4000	1412	141259

Flange Connection*						
DN	Standard	Outer Diameter of the Tube(mm)	Outer Diameter of the Flange(mm)	Flange Thickness(mm)	Screw	
					Number	Size
50	PN16	57	165	20	4	M16
80	PN16	89	200	20	8	M16
100	PN16	108	220	22	8	M16
150	PN16	159	285	24	8	M20
200	PN16	219	340	26	12	M20
250	PN16	273	405	29	12	M24
300	PN16	325	460	32	12	M24

Working Temperature			Working Pressure		
DN	Ambient Temperature	Medium Temperature	Ambient Atmospheric Pressure	Working Pressure	Max. Pressure Resistance
50	(-40~60)°C	(-40~60)°C	(86~106) kPa	≤ 0.8MPa	1.6MPa
80	(-40~60)°C	(-40~60)°C	(86~106) kPa	≤ 0.8MPa	1.6MPa
100	(-40~60)°C	(-40~60)°C	(86~106) kPa	≤ 0.8MPa	1.6MPa
150	(-40~60)°C	(-40~60)°C	(86~106) kPa	≤ 0.8MPa	1.6MPa
200	(-40~60)°C	(-40~60)°C	(86~106) kPa	≤ 0.8MPa	1.6MPa
250	(-40~60)°C	(-40~60)°C	(86~106) kPa	≤ 0.8MPa	1.6MPa
300	(-40~60)°C	(-40~60)°C	(86~106) kPa	≤ 0.8MPa	1.6MPa

* We use PN16 as our standard flange connection, we could also customize the flange connection based on specific project needs.

Available in Three Types of Measuring Path

CUBIC

Various models with distinct numbers of measuring paths allow for adaptability to different flow rates and a diverse range of process applications, ensuring optimal cost-effectiveness.

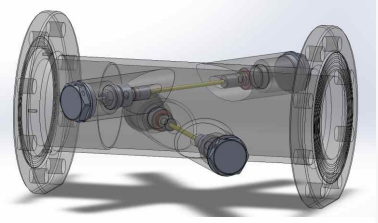

DN50~DN100 2-path

Cross 2-path design permits measurement of swirl, cross-flow and asymmetry for compressible flow, adapting complicated flow field.

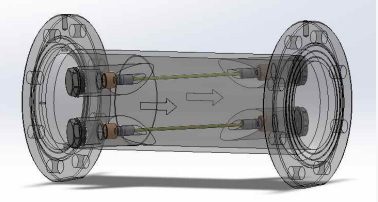

DN150 2-path

A reliable 2-path design provides adequate measurement accuracy with stable structure, less interference with flow to ensure the precise measurement.

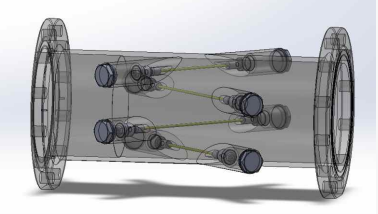

DN200~DN300 4-path

4-path design provides a redundant solution and multi-point measurement, ensure the measured values are comprehensive and accurate.

Product Diagrams-DN100

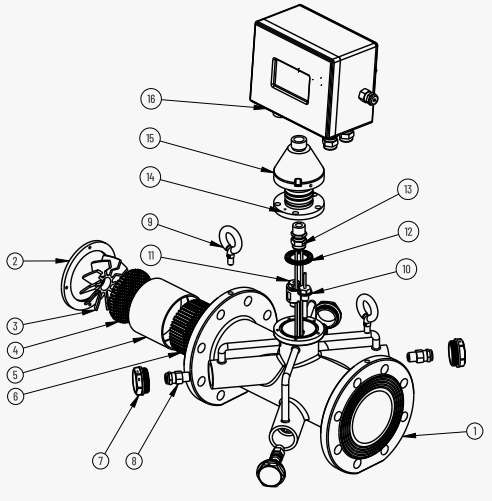

No.	Part Name	No.	Part Name
1	Pipeline Body	9	Hanging Ring
2	Rectifier Ring	10	Temperature Sensor
3	Spinner	11	Pressure Sensor
4	Cellular Rectifier 1	12	Rotating Gasket
5	Rectifier Housing	13	Flameproof Armored Joint
6	Cellular Rectifier 2	14	Rotating Base
7	Transducer Cover	15	Rotating Cover
8	Ultrasonic Transducer	16	Meter Controller Unit

Specifications

Ultrasonic Gas Flow Meter					
Specifications	DN100	DN150	DN200	DN250	DN300
Flow Range (m^3/h)	6~1000	13~1700	20~2700	30~3000	40~4000
Accuracy	Class 1.0				
Boundary Flow (m^3/h)	Q_t =60	Q_t =130	Q_t =200	Q_t =300	Q_t =400
Q start (m^3/h)	2	4.4	6.7	10	13.4
Maximum Pemmissible Error	Q_{min}< Q< Q_t, error: ± 2.0% Q_t< Q< Q_{max}, error: ±1.0%				
Repeatability	Q_{min}< Q< Q_t, error: ≤ 0.4% Q_t< Q< Q_{max}, error: ≤ 0.2%				
Flow Medium	Single-phase gas: natural gas, liquefied petroleum gas, air, etc.				
Medium Temperature	(-40~60) °C				
Nominal Pressure	≤ 1.6 MPa				
Work Pressure	≤ 0.8 MPa				
Ambient Temperature	(-40~60) °C				
Storage Temperature	(-40~60) °C				
Transducer Material	Titanium Alloy				
Power Supply	External power 9~24VDC, built-in lithium battery 3.6V				
Battery Life	≥ 4 years @ RT 20°C				
Analog Outputs	4~20mA				
Communication Interface	1x RS485 Port				
Communication Protocol	Modbus RTU				
Wireless Communication	GPRS				
LCD	Accumulated total volume (standard condition), instantaneous flow rate under standard condition, instantaneous flow rate under working condition, temperature, pressure, battery power, etc.				
Material in Contact with Medium	Stainless Steel 304				
Installation Method	PN16 Flange				
Ingress Protection	IP66				
Explosion Proof	Ex db ia IIB T3 Gb				

Dimension Diagrams

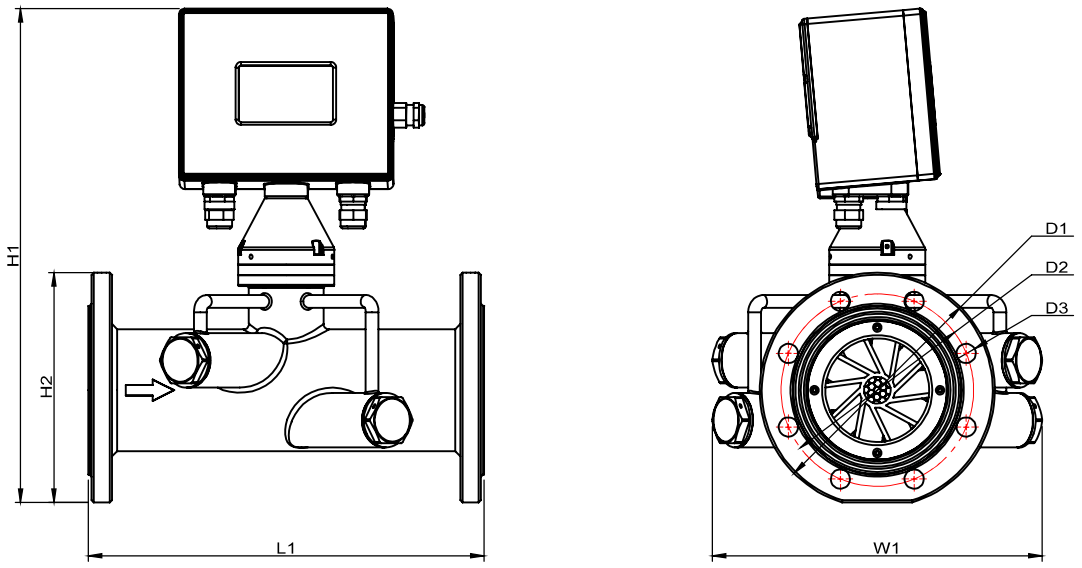

Use DN100 as an example to indicate the dimensional position.

Dimension	Code	DN100	DN150	DN200	DN250	DN300
Length	L1 (mm)	370	490	600	620	650
Width	W1 (mm)	308	325	393	537	537
Height	H1 (mm)	462	521	574	664	692
Height of the Pipeline	H2 (mm)	215	280	335	400	455
Outer Diameter of Flange	D1 (mm)	Ø220	Ø285	Ø340	Ø405	Ø460
Center distance of screw holes	D2 (mm)	Ø180	Ø240	Ø295	Ø355	Ø410
Diameter of bolt hole	D3 (mm)	8-Ø18	8-Ø22	12-Ø22	12-Ø26	12-Ø26

Accuracy and Repeatability Graph

Ultrasonic Flow Meter Accuracy

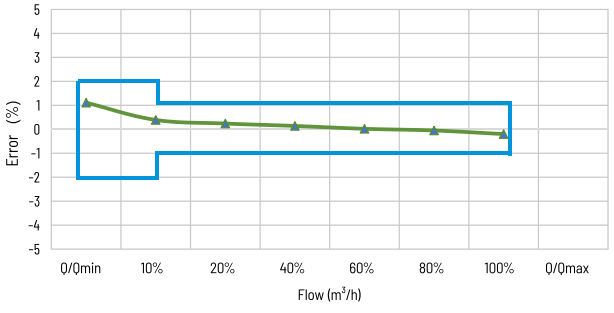

Ultrasonic Flow Meter Repeatability

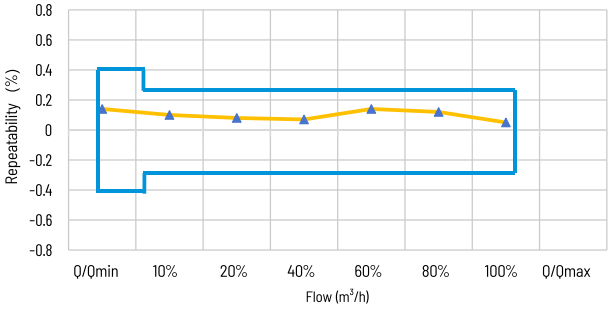

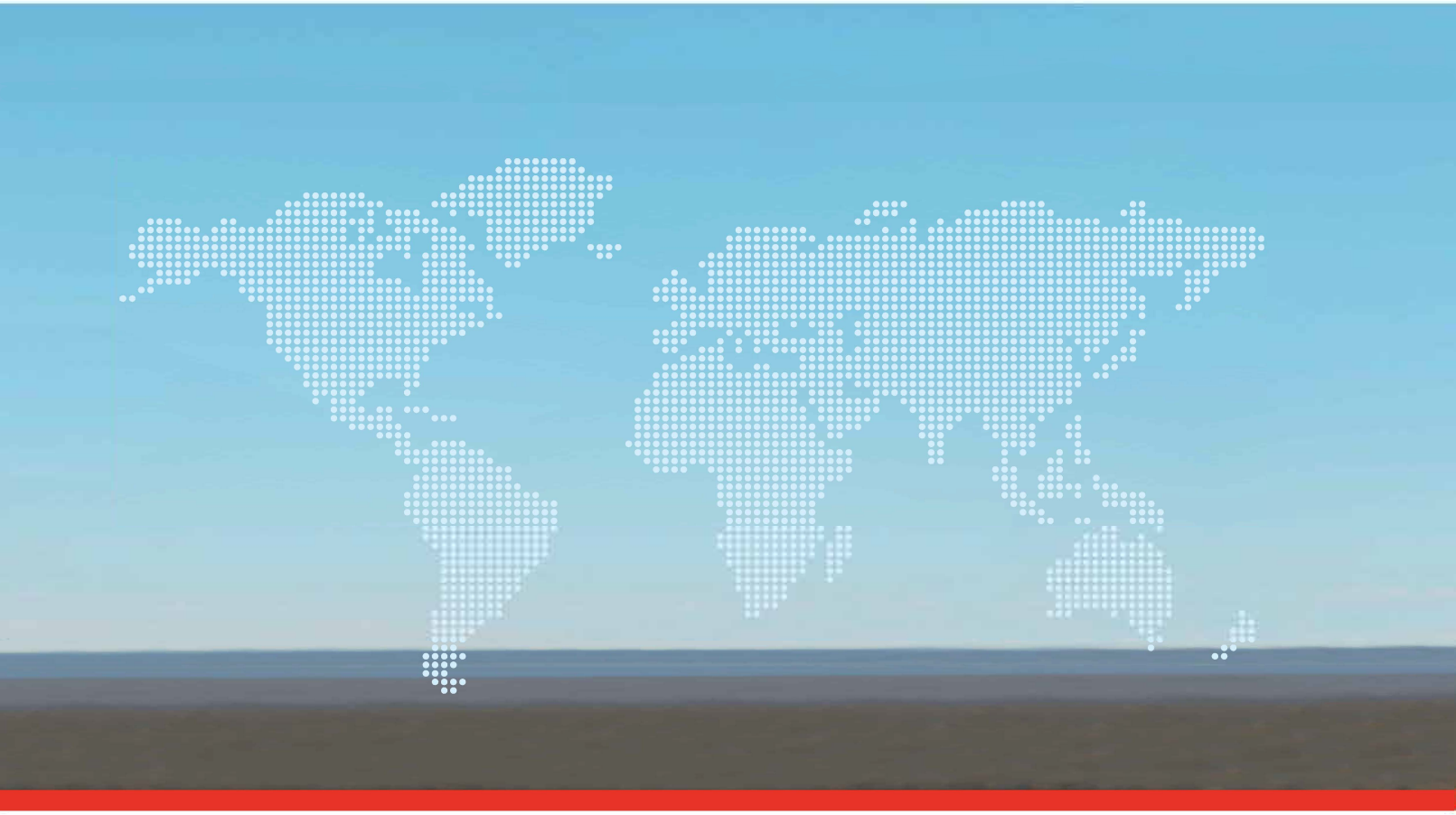

Cubic Sensor and Instrument Co., Ltd.

Add: Fenghuang No.3 Road, Fenghuang Industrial Park, Eastlake Hi-tech Development Zone,Wuhan, 430205, China
Tel: +86-27-81628827 Fax: +86-27-87401159
Web:en.gassensor.com.cn E-mail:sales@gassensor.com.cn